Journal of Applied and Theoretical Social Sciences

JATSS, 2022 ; 4(4), 406-422

First Submission: 07.11.2022
Revised Submission After Review:20.12.2022
Accepted For Publication:26.12.2022
Available Online Since:31.12.2022

Research Article

The Relationship Between Job Satisfaction and Organizational Commitment in Female Employees

M. Çağrı Pehlivanoğlu[1], Emre Eymür[2], Mustafa Emre Civelek[3]

Abstract

In this study the relationship between job satisfaction and organizational commitment in female employees has been examined. The structural equation modelling technique was used to analyze complex models with both direct and indirect relationships. Quantitative data was gathered by utilizing questionnaires. To demonstrate convergence validity, confirmatory factor analysis was used. Composite reliability and AVE scores were calculated to assess the scales' reliability and discriminant validity. The AMOS statistical program's structural equation model method was used to test the hypotheses. Out of six hypotheses, two of them were supported. It has been empirically proven that Internal Job Satisfaction has a direct effect on Affective Commitment and Normative Commitment, where External Job Satisfaction does not have a direct effect on any sub-dimensions of organizational commitment. Although job satisfaction and organizational commitment have been examined individually in many studies, this research focused on female employees working in the service sector while evaluating the relationship between the two concepts in the light of current data.

Keywords: Job Satisfaction, Organizational Commitment, Female Employees

JEL Codes: M10, M12, M54, D23

[1] Dr., Independent Researcher, Istanbul/Türkiye, cpehlivanoglu@yahoo.com, ORCID ID: https://orcid.org/0000-0002-7519-3068 (Corresponding Author).
[2] Dr., Independent Researcher, Istanbul/Türkiye, emreeymur@gmail.com, ORCID ID: https://orcid.org/0000-0001-7943-0430.
[3] Assoc. Prof., İstanbul Commerce University, Faculty of Busines Administration, Department of International Trade, Istanbul/Türkiye, ecivelek@ticaret.edu.tr, ORCID ID: https://orcid.org/0000-0002-2847-5126.

This article has been scanned for plagiarism with iThenticate, © Copyright 2022 Journal of Applied and Theoretical Social Sciences

Journal of Applied and Theoretical Social Sciences

JATSS, 2022; 4(4), 406-422

İlk Başvuru: 07.11.2022
Düzeltilmiş Makalenin Alınışı:20.12.2022
Yayın İçin Kabul Tarihi:26.12.2022
Online Yayın Tarihi:31.12.2022

Araştırma Makalesi

Kadın Çalışanlarda İş Tatmini ve Örgütsel Bağlılık Arasındaki İlişki

M. Çağrı Pehlivanoğlu[1], Emre Eymür[2], Mustafa Emre Civelek[3]

Öz

Bu çalışmada, kadın çalışanlarda iş tatmini ile örgütsel bağlılık arasındaki ilişki incelenmiştir. Yapısal eşitlik modelleme tekniği, hem doğrudan hem de dolaylı ilişkilere sahip karmaşık modelleri analiz etmek için kullanılmıştır. Nicel veriler anketler vasıtasıyla toplanmıştır. Yakınsama geçerliliğini göstermek için doğrulayıcı faktör analizinden faydalanılmıştır. Ölçeklerin güvenilirliğini ve ayırt edici geçerliliğini değerlendirmek için bileşik güvenilirlik ve AVE puanları hesaplanmıştır. Hipotezleri test etmek için AMOS istatistik programının yapısal eşitlik modeli yöntemi kullanılmıştır. Altı hipotezden ikisi kabul edilmiştir. İçsel İş Tatmininin, Duygusal Bağlılık ve Normatif Bağlılık üzerinde doğrudan bir etkiye sahip olduğu, Dışsal İş Tatmininin ise örgütsel bağlılığın herhangi bir alt boyutu üzerinde doğrudan bir etkisinin olmadığı ampirik olarak kanıtlanmıştır. Birçok çalışmada iş tatmini ve örgütsel bağlılık tekil olarak incelenmiş olsa da, bu araştırma mevcut veriler ışığında iki kavram arasındaki ilişkiyi değerlendirerek hizmet sektöründe bulunan kadın çalışanlara odaklanmıştır.

Anahtar Kelimeler: İş Tatmini, Örgütsel Bağlılık, Kadın Çalışanlar

JEL Kodlar: M10, M12, M54, D23

[1] Dr., Bağımsız Araştırmacı, Istanbul/Türkiye, cpehlivanoglu@yahoo.com, ORCID ID: https://orcid.org/0000-0002-7519-3068 (Corresponding Author).
[2] Dr., Bağımsız Araştırmacı, Istanbul/Türkiye, emreeymur@gmail.com, ORCID ID: https://orcid.org/0000-0001-7943-0430.
[3] Doç.Dr., İstanbul Ticaret Üniversitesi, İşletme Fakültesi,Uluslararası Ticaret Lisans Programı, Istanbul/Türkiye, ecivelek@ticaret.edu.tr, ORCID ID: https://orcid.org/0000-0002-2847-5126.

This article has been scanned for plagiarism with iThenticate, © Copyright 2022 Journal of Applied and Theoretical Social Sciences

1. Introduction[4]

In today's economic climate, where businesses face numerous challenges, many attempts are being made to provide equal rights to persons of both genders in the workplace. Engaging men and women in the labour force is crucial for boosting countries' social and economic welfare. Enterprises all over the world attach importance to gender diversity on the job. In this context, female employees' job satisfaction and organizational commitment of female employees stand out as factors that will increase organizational success. Therefore, this research scrutinizes the relationship between the two structural concepts in female employees.

Females account for 49.6% of the global population (The World Bank, 2020). In European Union member countries, the gender ratio in management roles is 63% males and 37% women (European Union, 2021). Women CEOs account for 8.2% of Fortune 500 firms, according to the 2021 list (Fortune, 2021). These statistics show that women are offered fewer management role opportunities than their population. It is crucial to implement changes that will allow women to work comfortably in the workplaces to equalize the odds over time. From this perspective, job satisfaction and organizational commitment of female employees in a corporate setting is a topic that requires significant attention and additional research to understand the positive and negative consequences fully.

Weiss et al. (1967)'s Minnesota Job Satisfaction and Meyer & Allen (1991)'s Three-Component Model of Organizational Commitment scales were used as measurement tools in this research. This study contributed to the former studies by investigating the relationship between job satisfaction and organizational commitment in female employees to gain a more profound understanding of management and organization research using recent data.

2. Conceptual Background

The main constructs of the study, Job Satisfaction and Organizational Commitment are explained in this part with respect to the literature. Also the Theoretical Model is developed accordingly.

2.1. Job Satisfaction

Job satisfaction is a significant concept for employees and societal factors in an organization. It has numerous positive consequences for people and institutions, including enhanced job productivity and motivation, physical and mental well-being, and inner serenity of personnel. Job satisfaction is linked to a person's job expectations and performance, and it is attained when outcomes fulfill expectations mutually. Therefore, employees are content with their jobs, and are thus expected to contribute more to their organizations (Brief, 1998).

Historically, during the 1930s, Hoppock (1935) made one of the initial studies to explore the concept. Later, Maslow (1943)'s hierarchy of needs on describing the stages of growth in humans has been a critical study that sheds light on the satisfaction of individuals. In the 1960s, psychologists began to develop critical theoretical perspectives. Herzberg et al. (1959) introduced two-factor theory; Porter (1962), Adams (1963), Locke (1969) worked on discrepancy theories of job satisfaction; Vroom (1964) developed a satisfaction theory derived from his more comprehensive expectation theory of motivation; also, Smith et al. (1969)'s Job Descriptive Index and Weiss et.al. (1967)'s Minnesota Satisfaction Questionnaire

[4] Permission was obtained from the Ethics Committee of Istanbul Commerce University with the decision dated 30.10.2022.

scales were formulated. In the 1970s the social information processing theory by Salancik and Pfeffer (1977, 1978), and the job characteristics model of Hackman and Oldham (1975) were some additional vital theoretical contributions to job satisfaction theory. A well-known job satisfaction model is Locke (1976)'s range of affect theory. The primary principle of this theory is that an individual's job satisfaction is specified by a gap between what one seeks and what one has in a job. Likely, the narrower the gap between what an employee wants and gets the more satisfied the employee will be. In subsequent years, researchers have further examined job satisfaction. Newstrom & Davis (1985) explored the idea of job satisfaction in two fundamentally distinct sub-dimensions and categorized it as favourable or unfavourable view of work among employees. Arnold & Feldman (1986) interpreted job satisfaction through the employee's overall positive feelings and identified the employee's favorable sentiments toward the workplace as a significant input that positively influences job satisfaction. Additionally, Knoop (1995) evaluated the concept of job satisfaction via the perspective of the employees and contended that employees are engaged in a continual process of evaluating their job satisfaction, enhancing their perspective on the job. Similarly, Spector et al. (2006) delineated job satisfaction as the total of an employee's feelings regarding all facets of the work. Consequently, either excellent or negative job satisfaction findings will emerge.

Measures of job satisfaction vary depending on whether researchers focus more on the job's cognitive or affective aspects. In this research, Weiss et.al. (1967)'s Minnesota Job Satisfaction Questionnaire was applied a measurement tool. This scale identifies the elements of the job that employees are satisfied with, including the sense of accomplishment, appreciation, level of responsibility, working conditions, prospects for promotion and compensation, etc. The Minnesota Job Satisfaction Scale is utilized in numerous scientific research because it is a comprehensive evaluation method in internal and external aspects (Hirschfeld, 2000). According to this scale, higher ratings indicate greater job satisfaction. The scale has two dimensions: (1) Internal Job Satisfaction, (2) External Job Satisfaction.

2.1.1. Internal Job Satisfaction

Internal Job Satisfaction, as a term, describes the nature of actual job tasks and employees' feelings toward work (Spector, 1997). The internal dimension is assessed as a job satisfaction factor related to employees' emotions, personality, genetics, and psychological well-being. The study by Cote & Morgan (2002), indicates that enhancing positive emotions increases job satisfaction while suppressing negative emotions decreases job satisfaction and increases quitting. People's personalities immediately impact the internal dimension of their job satisfaction. Characteristics is essential to guide personality. However, characteristics are related to genetics and some people may be born with good intrinsic characteristics, while others may be born with negative innate features. The studies show that these genetic differences might be valid for up to 30% of employees at work (Arvey et al., 1989). Psychological well-being is related to life, work, family, and society. Numerous psychological and emotional aspects impact job satisfaction (Kammeyer-Mueller, 2008). Internal satisfaction is the satisfaction tied to the people's sense of success and ambition, irrespective of incentives, and it varies from external satisfaction (Deniz, 2005). From the start of a person's working career until the end, changes in social life might have a good or negative impact on the internal job satisfaction dimension. The 20-item Minnesota Job Satisfaction Scale includes 12 items to measure internal dimensions; consequently, the internal satisfaction score is derived by dividing the total internal dimension.

2.1.2. External Job Satisfaction

External Job Satisfaction is the opposite of the internal dimension and is unrelated to one's personality traits and genetic characteristics. Organizational factors influence the external job satisfaction. This dimension encompasses all good actions that occur outside of the person. External job satisfaction refers to motivational components like rewards and appreciation statements that employees receive in exchange for good efforts. An organization's human resource policy and how employees' views of the organizational culture contribute to external work satisfaction. Therefore, salary, management style, working environment, and promotion conditions are various factors that influence external job satisfaction. Salary is among the major sources of motivation for employees to perform business. Fair salary management improves job satisfaction and, through increased individual productivity, slightly improves business financial satisfaction. Employees' job satisfaction and dedication will decline in a setting where salaries are insufficient or unfair (Kangas et al., 1999; Bartolo & Furlonger, 2000). Management style is another factor in external job satisfaction. Especially unpredictability in management style has a detrimental impact on employee work satisfaction whereas using accurate and concise job descriptions contributes to job satisfaction (Greenberg & Baron, 2003). The working environment is another factor for the employee's external job satisfaction (Youssef & Luthans, 2007). Workplace factors directly correlate with job satisfaction (Batugal & Tindowen, 2019), if employees perceive significant constraints in their workplace, they are more inclined to be dissatisfied at work (Spector, 1997). Promotion conditions are another factor. The results of earlier studies demonstrate a favourable link between job satisfaction, promotions, and title opportunities (Smucker, et al., 2003). Job satisfaction tends to improve with title advancement (Bilgiç, 1998). Since the title is an essential form of self-expression that influences the employee's authority over other employees and the prestige of the social environment, possible title confusion negatively affects job satisfaction (Robie et al., 1998). The factors forming the external dimension can change considerably more easily than the factors of the internal dimension. While internal satisfaction mostly consists of personal characteristics that people have made a habit of for many years, the external dimension has content that can evolve more easily compared to the flexible structure of organizations and can increase its effect on job satisfaction (Yousef, 1998). The 8 items of the 20-item Minnesota Job Satisfaction Scale are targeted at understanding the external dimensions. Because of this scale, the total scores acquired in the items of this dimension are divided by 8 and the external satisfaction score is achieved.

2.2. Organizational Commitment

Organizational commitment is acknowledged as a crucial factor in understanding employee behaviour in the workplace, such as satisfaction, intention to leave, or loyalty (Juaneda-Ayensa, et al., 2017). It is a psychological condition that influences employees' relationships with the company and their decision to stay or leave (Meyer & Allen, 1991). At least three interconnected aspects describe the theoretical construct in the literature: a powerful conviction of the purpose of the organization; a readiness to show significant endeavor for the organization's ideals, and an aspiration to continue being a part of the group (Mowday et al., 1979). Organizational commitment encompasses belongingness and the willingness to put in additional effort for the company (Drummond, 2000).

Due to its favourable effects on business practices, organizational commitment is a topic that draws the utmost attention in the literature from organizational behaviour and organizational psychology. Numerous scholars have conducted in-depth studies on

organizational commitment (Etzioni, 1961; Kanter 1968; Buchanan II, 1974; Salancik, 1977; Mowday et al., 1979; Reichers, 1985; O'Reilly & Chatman, 1986). These researchers have all classified organizational commitment under specific dimensions. However, the most important concern was the discrepancy in construct descriptions. Meyer & Allen (1991) developed an approach based on earlier commitment research in response to the many viewpoints and studies. This approach incorporates various attitude phenomena and gauges employees' attitudes toward the organization. In their view, to fully understand the conceptual framework, each of the three constructs of organizational commitment—affective, continuance, and normative commitment—should be analyzed separately. Each element is thought to emerge because of several circumstances and to have various consequences for behaviour at work. This conceptual model, which attaches three features of past commitment studies, is still often hailed in much research for evaluating organizational commitment. Due to this fact, also in this research, Meyer & Allen (1991)'s Three-Component Model of Organizational Commitment survey has been utilized as the measurement tool.

2.2.1. Affective Commitment

Affective Commitment describes an individual's emotional connection, involvement, and integration with the organization. As a major aspect of organizational commitment, affective commitment is an important factor determining how strongly an employee feels a bond to the organization. An employee that is effectively devoted passionately supports the organization's aims and wants to stay there. Affective commitment strengthens with encounters with upper staff and organizational units. High-affective-commitment workers show up to work each day and put their skills to use (Lok & Crawford, 1999). Compared to the other components, affective commitment strongly influences work behaviors (Mercurio, 2015). Many studies have significantly proved that affective commitment can lead to positive outcomes, which are seen in decreased absenteeism, decreased turnover, improved organizational behavior, and increased organizational performance (Noraazian & Khalip, 2016; Gonzalez & Guillen, 2007; Meyer & Allen, 1997; Wasti, 2012).

2.2.2. Continuance Commitment

Continuance Commitment is measured by the willingness of an employee to stay with the company. Generally, employees make reasonable decisions and weigh the cost of quitting. Employees choose to stay in the company longer if quitting would incur significant fees. Everything that raises the cost of leaving an organization fosters continuation commitment, with side bets and the presence of alternatives serving as its precursors (Allen & Meyer, 1990). The financial penalty of quitting the company so sheds light on ongoing commitment. Becker (1960) highlights the fundamentals of continuing commitment and raises the challenges a worker would encounter if they left the position. These hurdles include the possible dangers that may make the person feel anxious and concerned, such as the emotional emptiness the person would feel after leaving work, the drop in income, and the disruption of professional progress. Additionally, stressful circumstances like the hassle of finding a new job, the possibility of not getting one, and a reduction of negotiating power because of unemployment might be included among these losses. Therefore, employees' loyalty to their current company will be higher if they perceive there are fewer potential alternatives obtainable (Allen & Meyer, 1990; Wiener, 1982).

2.2.3. Normative Commitment

Normative Commitment is strong when employees constantly witness the employer's dedication to their welfare. A committed employee has a higher chance of having a favourable

influence on the company's success, is frequently satisfied with the job, and is more devoted to the company. Employees who feel that remaining with the company is a responsibility and a moral obligation are normatively committed. As a result, high normatively committed personnel engage more with the company. High work satisfaction levels lower staff turnover and improves an organization's capacity for talent acquisition and retention (Gregson, 1992). In general, normative commitment is explained as the ethical responsibilities' employees take on for the good of the company (Weiner, 1982). People internalize it fully and demonstrate an ethical commitment to their organizations when they are exposed to socialization in which loyalty to one's bosses is praised and valued (Randall, 1987). This gives employees the impression that they should be doing something to earn the company's cash rewards and incentives. Employees who feel appreciated form a normative bond with their employers (Meyer, et al., 1993).

2..3. Theoretical Model

This study sought to clarify the relationship between job satisfaction and organizational commitment dimensions. A theoretical model was developed in accordance with the theoretical underpinnings of these notions, as depicted in Figure 1.

Figure 1

Theoretical Model

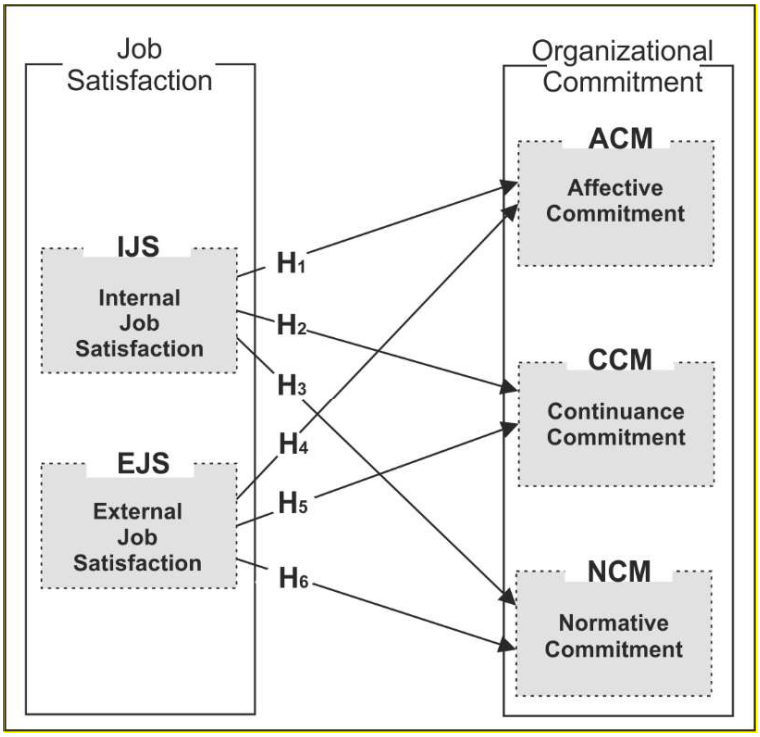

Note. Created by the authors.

3. Hypothesis Development

Many studies have been conducted on the relationship between job satisfaction and organizational commitment. For Mowday et al. (1979), commitment differs from work satisfaction as an attitude. Commitment denotes a broad affective engagement with the organization which develops slowly over time. In contrast, job satisfaction means a person's

attitude toward the job or certain job-related aspects and reflects more instant reactions. As expressed by Williams & Hazer (1986), job satisfaction is a defining input of organizational commitment. As per Glisson and Durick (1988), an organic connection exists between the concepts, and each shouldn't be considered independently. According to various research that examines the link between the two concepts in terms of dimensions, job satisfaction is an essential requirement for organizational commitment (Testa, 2001; Currivan, 1999). Considering that the dimensions of job satisfaction, internal and external, both include different satisfaction processes, their relations with the dimensions of organizational commitment were tested with different hypotheses. Accordingly, the following hypothesis was developed for the objectives of the research considering the apparent relationship between the two concepts in the literature.

H_1: Internal Job Satisfaction has a direct effect on Affective Commitment

H_2: Internal Job Satisfaction has a direct effect on Continuance Commitment

H_3: Internal Job Satisfaction has a direct effect on Normative Commitment

H_4: External Job Satisfaction has a direct effect on Affective Commitment

H_5: External Job Satisfaction has a direct effect on Continuance Commitment

H_6: External Job Satisfaction has a direct effect on Normative Commitment

4. Research Methods

Permission from an Ethics Committee from a university is required in every survey conducted after 2020. Since a survey was used in this study as a data collection method, the permission has been obtained from Ethics Committee of the Istanbul Commerce University with a decision on the date of 30.10.2022 and document number 9-1. The research scales were derived from previous studies. Questionnaires have been used to collect quantitative data. The structural equation modeling approach was used to examine complex multiple-variable models and pinpoint relationships between direct or indirect variables. Confirmatory factor analyses were fulfilled to ascertain the convergent validity. Composite reliability and AVE values were calculated to evaluate the scales' reliability and discriminant validity, respectively. The theoretical model's hypotheses were tested in the AMOS statistics software by using structural equation modeling, a multivariable statistical approach (Meydan & Şen, 2011). The approach has been utilized to comprehend the theoretical model's indirect and direct effects (Civelek, 2018). Furthermore, this method was preferred to reduce measurement errors (Byrne, 2010). The statistical programs SPSS and AMOS were utilized to perform the analyses.

4.1. Sampling and Measures

The constructs in the research's theoretical model are assessed using scales derived from existing literature. From strong disagreement to strong acceptance, 5-point Likert scales were applied. More than 500 questionnaires were distributed and 424 of them were valid. The questionnaires were collected from female employees working at service sector in Turkey. As measurement tools, Weiss et al. (1967)'s Minnesota Job Satisfaction Questionnaire with 20 items short version, and Meyer & Allen (1991)'s Three-Component Model of Organizational Commitment survey with 18 items were used. Both scales were translated into Turkish.

4.2. Construct Reliability and Validity

Before performing confirmatory factor analysis (CFA), exploratory factor analysis (EFA) is done to purify the research data (Anderson & Gerbing, 1988). Twenty-seven components were left after the principal component analysis. Convergent validity was subsequently determined using CFA. The fit indices values for the CFA were deemed adequate, with values such as $\chi 2/DF = 2.714$, CFI=0.924, IFI=0.925, and RMSEA= 0.064 (Civelek, 2018). In Table 1, the factor loads from the CFA outcomes are displayed. Table 2 shows that the average extracted variance values fell within allowable bounds (i.e., 0.5). (Byrne, 2010). These results showed that the constructs had convergent validity. The square roots of each variable's AVE values were calculated to establish discriminant validity. The square root of the AVE values is displayed in Table 2's diagonals. The correlation values in the same column are all exceeded by the square root of AVE values. The evidence confirms that the discriminant validity (Civelek, 2018). Each structure's reliability was evaluated independently. Cronbach's alpha and composite reliability values are close to or greater than the proposed cutoff value of 0.7 (Fornell & Larcker, 1981).

Table 1

Results of Confirmatory Factor Analysis

Variables	Items	Standardized Factor Loads	Unstandardized Factor Loads
Affective Commitment (ACM)	ACM0121	0.748	1
	ACM0323	0.820	1.055
	ACM0424	0.825	0.974
	ACM0222	0.725	0.843
	ACM0626	0.828	1.047
	ACM0525	0.852	1
Continuance Commitment (CCM)	CCM0127	0.602	1
	CCM0632	0.711	1.144
	CCM0430	0.761	1.244
	CCM0228	0.747	1.254
	CCM0329	0.792	1.325
	CCM0531	0.803	1.380
Normative Commitment (NCM)	NCM0537	0.767	1
	NCM0133	0.519	0.524
	NCM0335	0.645	0.656
Internal Job Satisfaction (IJS)	IJS0606	0.524	1
	IJS0707	0.614	1.266
	IJS1010	0.774	2.092
	IJS0404	0.729	1.693
	IJS0303	0.668	1.681
	IJS0808	0.745	1.646
	IJS0909	0.678	1.582
External Job Satisfaction (EJS)	ESJ0618	0.934	1
	ESJ0719	0.659	0.626
	ESJ0820	0.759	0.848

ESJ0214	0.773	0.810
ESJ0113	0.874	0.968

p<0.01 for all items

The descriptive statistics for the dimensions, Cronbach's alpha, composite reliability coefficients, average extracted values for variance, and Pearson correlations between the dimensions are all displayed in Table 2.

Table 2

Construct Descriptive, Reliability and Correlation

Variables	1	2	3	4	5
1.Affective Commitment	(.801)				
2.Continuance Commitment	.117*	(.739)			
3.Normative Commitment	.507*	.458*	(.652)		
4.Internal Job Satisfaction	.697*	.146*	.428*	(.680)	
5. External Job Satisfaction	.549*	.205*	.385*	.649*	(.806)
Composite reliability	.915	.877	.684	.856	.901
Average variance ext.	.642	.546	.425	.463	.649
Cronbach α	.909	.870	.712	.861	.878

*p < 0.05

Note. Values in diagonals represent the AVEs' square root.

4.3 Test of the Hypotheses

Covariance-based structural equation modelling (CB-SEM) was used to test the hypotheses. The results are as seen in Figure 2. CB-SEM is a confirmatory technique (Civelek, 2018), and so, it is employed in this study to support the hypotheses established using literature-based foundational theories. The structural model's fit was evaluated using the goodness of fit indices and the results for the structural model were deemed satisfactory (i.e., $\chi 2/DF = 2.348$, CFI = 0.944, IFI = 0.945, RMSEA= 0.056) (Civelek, 2018).

Table 3

Results of Tests

Relationships	Standardized Coefficients	Unstandardized Coefficients	Hypotheses	Results
IJS → ACM	0.768*	0.961	H_1	Supported
IJS → CCM	0.115	0.261	H_2	Not Supported
IJS → NCM	0.553*	0.801	H_3	Supported
EJS → ACM	0.051	0.107	H_4	Not Supported
EJS → CCM	0.098	0.243	H_5	Not Supported
EJS → NCM	0.052	0.158	H_6	Not Supported

**p* < 0.05

H_1 hypothesis is confirmed. This means Internal Job Satisfaction (IJS) directly effects Affective Commitment (ACM). *H_2* hypothesis is unsupported. This means Internal Job Satisfaction (IJS) directly effects Continuance Commitment (CCM). *H_3* hypothesis is confirmed. This means Internal Job Satisfaction (IJS) has a direct effect on Normative

Commitment (NCM). H_4 hypothesis is unsupported. This indicates that External Job Satisfaction (EJS) does not directly affect Affective Commitment (ACM). H_5 hypothesis is unsupported. This indicates that External Job Satisfaction (EJS) does not directly affects Continuance Commitment (CCM). H_6 hypothesis is unsupported. This indicates that External Job Satisfaction (EJS) does not directly affect Normative Commitment (NCM).

Figure 2

Results of the SEM Analysis

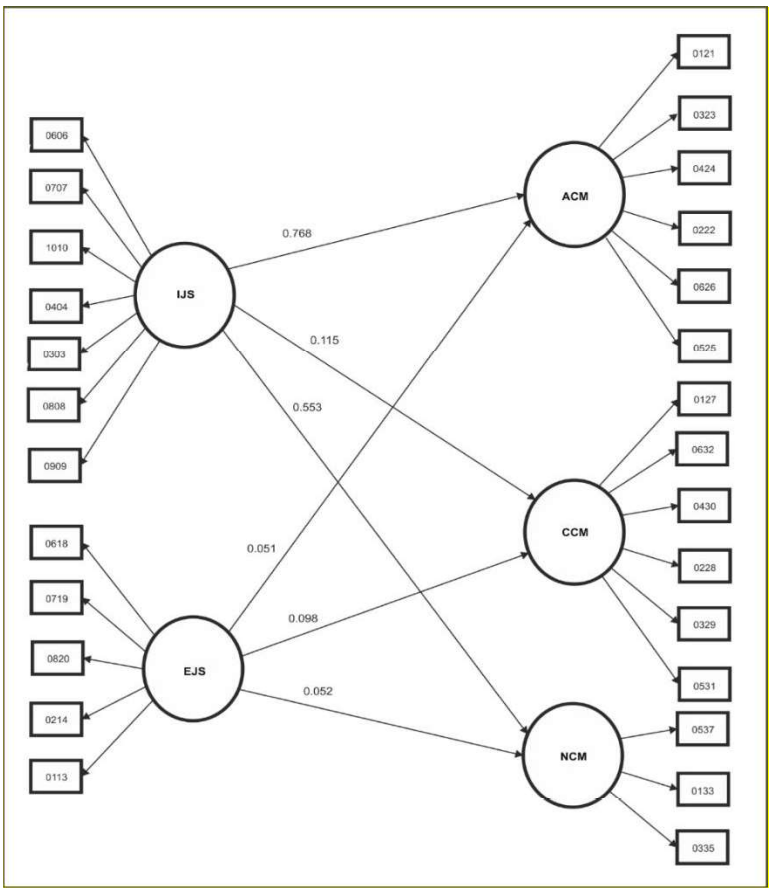

Note. $\chi 2$/DF = 2.348, CFI = 0.944, IFI = 0.945, RMSEA= 0.056

Note. Created by the authors.

6. Discussion

A wide range of conclusions has been drawn from the former research when the relationships between the dimensions of the two theoretical constructs have been studied. The results of this research conform with the extant literature. The findings in the literature have revealed that improving organizational success depends on employee job satisfaction and organizational commitment. Many past studies distinguished positive relationships between job satisfaction and organizational commitment (Thomas & Kevin, 2002; Karataş & Güleş, 2010). Accordingly, high organizational commitment is expected of employees who have greater job satisfaction, and raising organizational commitment has a positive effect on job satisfaction

(Guatam et al., 2004; Sığrı & Basım, 2006). Additionally, it is presumed that job satisfaction is a requirement for organizational commitment (Doherty & Fulford, 2005; Sergeant & Frenkel, 2000). Many researchers determined positive relationships between the dimensions of these two constructs and described job satisfaction as a concept that fosters organizational commitment (Porter et al., 1974; Dubinsky et al., 1992; Conley & Wooley, 2000; Ruyter et al., 2001; Top, 2012). Some of the research findings that reach similar results in the national literature are as follows: Çelen et al., (2013) examined the relationships between the constructs based on their dimensions and determined that employees with high affective and normative commitment had high job satisfaction levels, while a similar link could not be found between continuance commitment and job satisfaction. Açıkalın (2011) observed that internal and external job satisfaction affect affective and normative commitment but not continuance commitment.

5. Conclusion

Employees have a key role in an organization's success. The study contributes to the literature by delivering up-to-date insight into how female employees' job satisfaction relates to organizational commitment. Depending on the findings obtained from this research, it has been observed that internal job satisfaction directly affects affective commitment and normative commitment. Another notable outcome of the study is that there was no relationship between external job satisfaction and organizational commitment dimensions. The processual difference between internal satisfaction, which centers on the employees' sense of satisfaction while doing their job, and external satisfaction, which focuses on physical conditions and rewarding employees after doing the job, affects the employees' commitment to the organization. Low, or high external job satisfaction among female employees is not identified as influencing organizational commitment in this study. In practice, the knowledge acquired by monitoring the link between internal job satisfaction factors and the participants' affective and normative commitment may be valuable in developing, supporting, and rewarding female employees. Internal satisfaction, in which emotional components are prominent, considerably impacts women's emotions about the organization according to the population of this study. These findings can be used to study further the link between women's internal job satisfaction and affective and normative organizational commitment. However, the findings cannot be extrapolated to other occupational settings and geographical areas because the research was focused on individuals working in the service sector in a single country. Future studies should aim to collect a broader and more representative sample of employees.

References

Açıkalın, C. (2011). İçsel ve dışsal doyumun örgütsel bağlılığa etkisi: Eskişehir üretim sektörü örneği. *Dumlupınar Üniversitesi Sosyal Bilimler Dergisi, 31*, 237-254.

Adams, J. S. (1963). Towards an understanding of inequity. *The Journal of Abnormal and Social Psychology, 67*(5), 422–436.

Allen, N. J., & Meyer, J. P. (1990). The measurement and antecedents of affective, continuance and normative commitment to the organization. *Journal of Occupational Psychology, 63*(1), 1-18.

Anderson, J., & Gerbing, D. (1988). Structural equation modelling in practice: a review and recommended two-step approach. *Psychological Bulletin, 103*, 411-423.

Arnold, H. J., & Feldman, D. C. (1986). *Organization Behavior*. McGraw-Hill Book Company.

Arvey, R. D., Bouchard, T. J., Segal, N. L., & Abraham, L. M. (1989). Job satisfaction: environmental and genetic components. *Journal of Applied Psychology, 74*(2), 187-192.

Bagozzi, R. P., & Yi, Y. (1990). Assessing method variance in multitrait-multimethod matrices: the case of self-reported affect and perceptions at work. *Journal of Applied Psychology, 75*(1), 547-560.

Bartolo, K., & Furlonger, B. (2000). Leadership and job satisfaction among aviation fire fighters in Australia. *Journal of Managerial Psyhchology, 15*(1-2), 87–97.

Batugal, M. L., & Tindowen, D. J. (2019). Influence of organizational culture on teachers' organizational commitment and job satisfaction: the case of catholic higher education institutions in the Philippines. *Universal Journal of Educational Research, 7*(11), 2432-2443.

Becker, H. S. (1960). Notes on the concept of commitment. *American Journal of Sociology, 66*(1), 32-40.

Bilgiç, R. (1998). The relationship between job satisfaction and personal characteristics of Turkish workers. *The Journal of Psychology: Interdisciplinary and Applied, 132*(5), 549–557.

Brief, A. P. (1998). *Attitudes in and around organizations*. Sage Publications, Inc.

Buchanan II, B. (1974). Building organizational commitment: The socialization of managers in work organizations. *Administrative Science Quarterly, 19*(4), 533-546.

Byrne, B. M. (2010). S*tructural equation Modeling with AMOS*. Routledge Taylor & Francis Group.

Civelek, M. (2018). *Yapısal eşitlik modellemesi metodolojisi*. İstanbul: Beta.

Conley, S., & Wooley, S. (2000). Teacher role stress, higher order needs and work outcomes. *Journal of Educational Administration, 38*(2), 183-193.

Cote, S., & Morgan, L. M. (2002). A longitudinal analysis of the association between emotion regulation, job satisfaction, and intentions to quit. *Journal of Organizational Behavior, 23*(8), 947–962.

Currivan, D. (1999). The causal order of job satisfaction and organizational commitment in models of employee turnover. *Human Resource Management Review, 9*(4), 495-524.

Çelen, Ö., Teke, A., & Cihangiroğlu, N. (2013). Örgütsel bağlılığın iş tatmini üzerine etkisi Gülhane Askeri Tıp Fakültesi Eğitim Hastanesinde bir araştırma. *Süleyman Demirel Üniversitesi, İ.İ.B.F. Dergisi, 18*(3), 399-410.

Deniz, M. (2005). *Bir tutum çeşidi olarak iş doyumu örgütsel davranış boyutlarından seçmeler*, Ed. Mehmet Tikici, Ankara: Nobel Yayını.

Doherty, N. F., & Fulford, H. (2005). Do information security policies reduce the incidence of security breaches: an exploratory analysis. *Information Resources Management Journal, 18*(4), 21-39.

Drummond, H. (2000). *Introduction to Organizational Behavior*. Oxford University Press.

Dubinsky, A., Ronald, E., Masaaki, K., Chae, U., & Hee-Cheol, M. (1992). Influence of role stress on industrial salespeople's work in the United States, Japan, And Korea. *Journal of International Business Studies, 23*(1), 79-85.

Etzioni, A. (1961). *A comparative analysis of complex organizations*. Free Press.

European Union. (2021). *Eurostat Newsrelease*. Retrieved September 05, 2022, from https://ec.europa.eu/

Fornell, C., & Larcker, D. (1981). Evaluating structural equation models with unobservable variables and measurement error. *Journal of Marketing Research, 18*(1), 39-50.

Fortune. (2021, October 03). The female CEOs on this year's Fortune 500 just broke three all-time records (E. Hinchliffe, Dü.). *Fortune*. https://www.fortune.com

Glisson, C., & Durick, M. (1988). Predictors of job satisfaction and organizational commitment in human service organizations. *Administrative Science Quarterly, 33*(1), 61-81.

Gonzalez, T., & Guillen, M. (2007). Organizational commitment: a proposal for a wider ethical conceptualization of 'normative commitment. *Journal of Business Ethics, 78*(3), 403-409.

Greenberg, J., & Baron, R. A. (2003). *Behavior in organizations: understanding and managing the human side of work*. Prentice Hall.

Gregson, T. (1992). An investigation of the causal ordering of satisfaction and organizational commitment in turnover models in accounting. *Behavioral Research in Accounting, 4*, 80-95.

Guatam, T., Van Dick, R., & Wagner, U. (2004). Organizational identification and organizational commitment: distinct aspects of two related concepts. *Asian Journal of Social Psychology, 7*(3), 301-315.

Hackman, J. R., & Oldham, G. R. (1975). Development of the job diagnostic survey. *Journal of Applied Psychology, 60*(2), 159–170.

Herzberg, F., Mausner, B., & Snyderman, B. (1959). *The motivation to work (2nd ed.)*. John Wiley & Sons.

Hirschfeld, R. R. (2000). Does revising the intrinsic and extrinsic subscales of the Minnesota Satisfaction Questionnaire short form make a difference? *Educational and Psychological Measurement, 60*(2), 255-270.

Hoppock, R. (1935). *Job satisfaction.* Harper Publishing.

Juaneda-Ayensa, E., San Emeterio, M. C., & González-Menorca, C. (2017). Person-organization commitment: bonds of ınternal consumer in the context of non-profit organizations. *Frontiers in Psychology, 8*(1227), 1-15.

Kammeyer-Mueller, J. D. (2008). A quantitative review of mentoring research: test of a model. *Journal of Vocational Behavior, 72*(3), 269-283.

Kangas, S., Kee, C. C., & McKee-Waddle, R. (1999). Organizational factors, nurses' job satisfaction, and patient satisfaction with nursing care. *The Journal of Nursing Administration, 29*(1), 32-42.

Kanter, R. M. (1968). Commitment and social organization: A study of commitment mechanisms in utopian communities. *American Sociological Review, 33*(4), 499-517.

Karataş, S., & Güleş, H. (2010). İlköğretim okulu öğretmenlerinin iş tatmini ile örgütsel bağlılığı. *Uşak Üniversitesi Sosyal Bilimler Dergisi, 3*(2), 74-89.

Knoop, R. (1995). Relationships among job involvement, job satisfaction and organizational commitment for nurses. *Journal of Psychology: Interdisciplinary and Applied, 129*(6), 643-649.

Locke, E. A. (1969). What is job satisfaction? *Organizational Behavior & Human Performance, 4*(4), 309–336.

Locke, E. A. (1976). *The nature and causes of job satisfaction, in M.D. Dunnette (ed.),* Handbook of Industrial and Organizational Psychology. Rand McNally.

Lok, P., & Crawford, J. (1999). The relationship between commitment and organizational culture, subculture, leadership style and job satisfaction in organizational change and development. *Leadership & Organization Development Journal, 20*(7), 365-377.

Maslow, A. H. (1943). A theory of human motivation. *Psychological Review, 50*(4), 370–396.

Mercurio, Z. A. (2015). Affective commitment as a core essence of organizational commitment an integrative literature review. *Human Resource Development Review, 14*(4), 389–414.

Meydan, C. H., & Şen, H. (2011). *Yapısal eşitlik modellemesi AMOS uygulamaları.* Detay Yayıncılık.

Meyer, J. P., & Allen, N. J. (1991). A three-component conceptualization of organizational commitment. *Human Resource Management Review, 1*(1), 61-89.

Meyer, J., & Allen, N. (1997). *Commitment in the workplace: Theory, research and application*. SAGE Publications.

Meyer, J., Allen, N., & Smith, C. (1993). Commitment to organizations and occupations: extension and test of a three-component conceptualization. *Journal of Applied Psychology, 78*(4), 538-551.

Mowday, R. T., Steers, R. M., & Porter, L. W. (1979). The measurement of organizational commitment. *Journal of Vocational Behavior, 14*, 224-247.

Newstrom, J. W., & Davis, K. (1985). *Human behavior at work*. Tata McGraw Hill Publications.

Noraazian, & Khalip, M. (2016). A three-component conceptualization of organizational commitment. *International Journal of Academic Research in Business and Social Sciences, 6*(12), 16-23.

O'Reilly, C., & Chatman, J. (1986). Organizational commitment and psychological attachment: The effects of compliance, identification and internalization on prosocial behaviour. *Journal of Applied Psychology, 71*(3), 492-499.

Porter, L. W. (1962). Job attitudes in management: I. Perceived deficiencies in need fulfillment as a function of job level. *Journal of Applied Psychology, 46*(6), 375–384.

Porter, L., Steers, R., Mowday, R., & Boulian, P. (1974). Organizational commitment, job satisfaction and turnover among psychatric technicians. *Journal of Applied Psychology, 59* (5), 603-609.

Randall, D. M. (1987). Commitment and organizations: the organization man revisited. *Academy of Management Review, 12*(3), 460-471.

Reichers, A. E. (1985). A review and reconceptualization of organizational commitment. *The Academy of Management Review, 10*(3), 465-476.

Robie, C., Ryan, A. M., Schmieder, R. A., Parra, L. F., & Smith, P. C. (1998). The relation between job level and job satisfaction. *Group and Organization Management, 23*(4), 470–495.

Ruyter, K., Wetzels, M., & Feinberg, R. (2001). Role stress in call centers: its effects on employee performance and satisfaction. *Journal of Interactive Marketing, 15*(2), 23-35.

Salancik, G. (1977). Commitment and the control of organizational behavior and belief. In: Staw, B. and Salancik, G., Eds., *New Directions in Organizational Behavior*. St. Clair Press.

Salancik, G. R., & Pfeffer, J. (1978). A social information processing approach to job attitudes and task design. *Administrative Science Quarterly, 23*, 224-253.

Sergeant, A., & Frenkel, S. (2000). When do customer contact employees satisfy customers? *Journal of Service Research, 3*(1), 18-34.

Sığrı, Ü. B. (2006). İşgörenlerin iş doyum ve örgütsel bağlilik düzeylerinin analizi: Kamu ve özel sektörde karşilaştirmali bir araştırma. *Selçuk Üniversitesi Sosyal ve Ekonomik Araştırmalar Dergisi, 6*(12), 130-154.

Smith, P. C., Kendall, L., & Hulin, C. L. (1969). The measurement of satisfaction in work and retirement: *A strategy for the study of attitudes*. Rand McNally.

Smucker, M. K., Whisenant, W. A., & Pedersen, P. M. (2003). An investigation of job satisfaction and female sports journalist. *Sex Roles, 49*(7), 401-407.

Spector, P. E. (1997). *Job satisfaction: Application, assessment, causes, and consequences*. Sage Publications.

Spector, P. E., Fox, S., M. Penney, L., Bruursema, K., Goh, A., & Kessler, S. (2006). The dimensionality of counterproductivity: are all behaviours created equal? *Journal of Vocational Behaviour, 68*(3), 446-460.

Testa, M. R. (2001). Organizational commitment, job satisfaction, and effort in the service environment. *The Journal of Psychology Interdisciplinary and Applied, 135*(2), 226- 236.

The World Bank. (2020). *Population, female (% of total population)*. The World Bank. Retrived 06 September, 2022, from https://data.worldbank.org/indicator/SP.POP.TOTL.FE.ZS

Thomas, D. C., & Kevin, A. (2002). The effect of cultural differences on behavioral responses to low job satisfaction. *Journal of International Business Studies, 33*(2), 309-326.

Top, M. (2012). Hekim ve hemşirelerde örgütsel bağlılık, örgütsel güven ve iş doyumu profili. *İstanbul Üniversitesi İşletme Fakültesi Dergisi, 41*(2), 258-277.

Vroom, V. (1964). *Work and motivation.* Wiley and Sons.

Wasti, A. (2012). Örgütsel bağlılık kavramı, odakları, öncül ve sonuçları, *Çalışma Yaşamında Davranış: Güncel Yaklaşımlar (2 b.)*. (G. Y. Aşkın Keser, Dü.) Umuttepe Yayınları.

Weiner, Y. (1982). Commitment in organizations: a normative view. *Academy Of Management Review, 7*(3), 418-428.

Weiss, D. J., Dawis, R. V., England, G. W., & Lofquist, L. H. (1967). *Manual for the minnesota satisfaction questionnaire*. University of Minnesota, Industrial Relations Center.

Williams, L. J., & Hazer, J. T. (1986). Antecedents and consequences of satisfaction and commitment in turnover models: A reanalysis using latent variable structural equation methods. *Journal of Applied Psychology, 71*(2), 219–231.

Yousef, D. A. (1998). Satisfaction with job security as a predictor of organizational commitment and job performance in a multicultural environment. *International Journal of Manpower, 19*(3), 184-194.

Youssef, C., & Luthans, F. (2007). Positive organizational behavior in the workplace: the impact of hope, optimism and resilience. *Journal of Management, 33*(5), 774-800.